HEATER Thermo 90ST HEIZGERÄT Thermo 90ST CHAUFFAGE Thermo 90ST	from No / up to No	**Figure** **Bild** **Figure**

TADANO
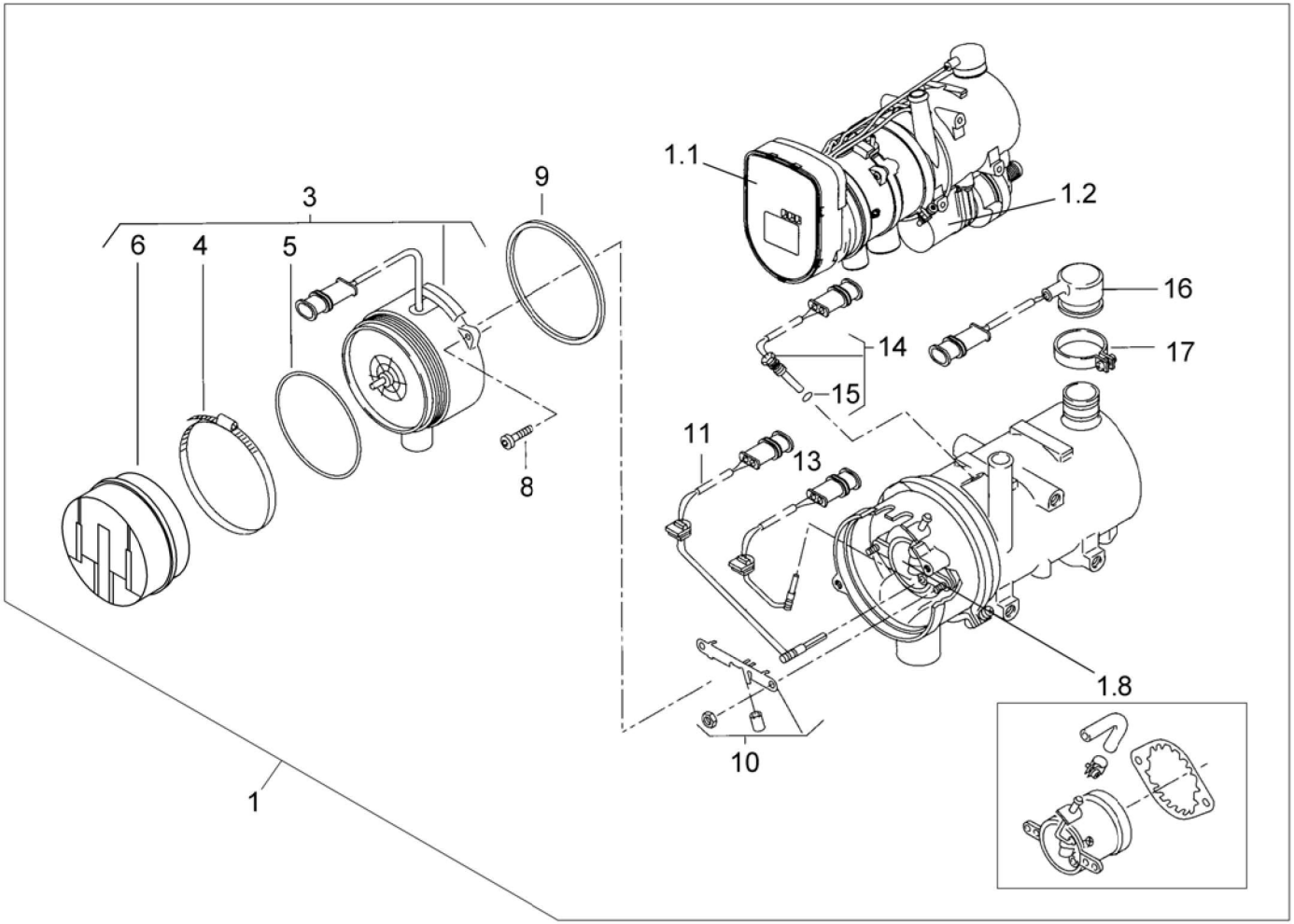
99707019158